ITEM NO.	PART NUMBER	DESCRIPTION	DESCRIPTION 2	QTY
1	FB-168-2500-2	BEAM, PULTRUDED STOCK	SERIES 2500 x 168 in, GRAY	1
2	TG0813-0005	BUSHING	13/16 in x 4-1/16 in	4
3	TG0813-0006	BUSHING	13/16 in x 3-1/8 in	4
4	FOAM	-	-	1
5	EC25-0003-2	END CAP	SERIES 2500, GRAY	2
6	TM-0045	MOUNT ASSEMBLY, TANGENT	SDLH	1
7	PL-0037	PLATE, FRONT		1
8	HB0750-0001	HEX BOLT	3/4 in - 10 x 5-1/2 in	2
9	LW0750-0001	LOCK WASHER	3/4 in	2
10	HN0750-0001	HEX NUT	3/4 in - 10	2

REVISIONS			
REV.	DESCRIPTION	DATE	INITIALS

PUPI®
www.pupicrossarms.com

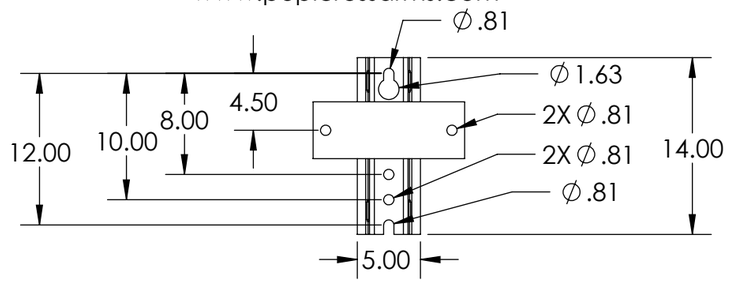

DETAIL -A-
SCALE 1:12

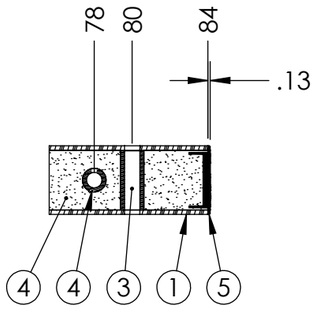

SECTION A-A
SCALE 1 : 8

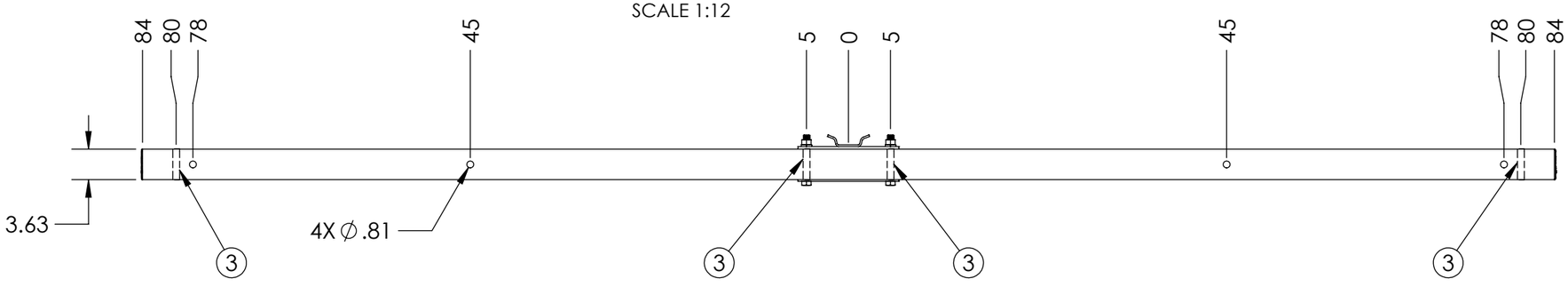

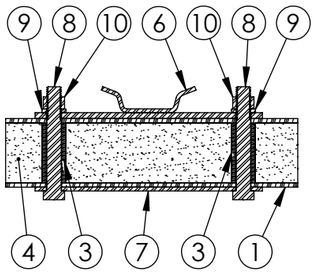

SECTION B-B
SCALE 1 : 8

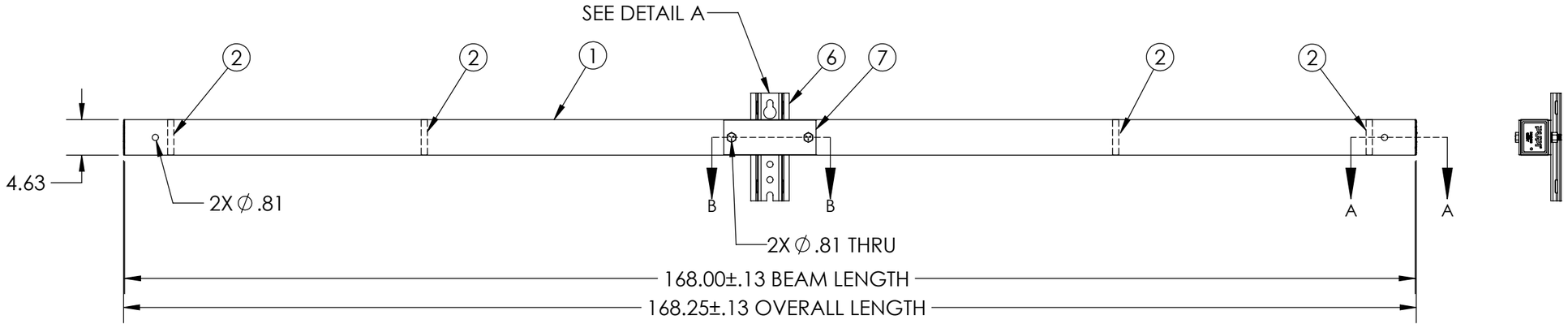

NOTES:
1. CENTER OF MOUNT HOLE(S) TO HOLES TOLERANCE ±0.06
2. CALCULATED AVERAGE ULTIMATE VERTICAL LOAD = 5,100 LBS PER WIRE, 2 WIRES AT ±78
   = 3,250 LBS PER WIRE, 4 WIRES AT ±45 & ±78
3. CALCULATED AVERAGE ULTIMATE LONGITUDINAL LOAD = 3,000 LBS PER WIRE, 2 WIRES AT ±78
   = 2,000 LBS PER WIRE, 4 WIRES AT ±45 & ±78
4. CALCULATED AVERAGE ULTIMATE TRANSVERSE LOAD = 9,750 LBS PER SIDE
5. RECOMMENDED MAXIMUM WORKING LOAD OF 50% OF AVERAGE ULTIMATE STRENGTH

---UNLESS OTHERWISE SPECIFIED---
DIMENSIONS ARE IN INCHES
INTERPRET DIM AND TOL PER ASME Y14.5-2009
ANGULAR: MACH ±2°
BEND ±2°
ONE PLACE DECIMAL ±0.1
TWO PLACE DECIMAL ±0.02

PROPRIETARY AND CONFIDENTIAL
THE INFORMATION CONTAINED IN THIS DRAWING IS THE SOLE PROPERTY OF GEOTEK. ANY REPRODUCTION IN PART OR AS A WHOLE WITHOUT THE WRITTEN PERMISSION OF GEOTEK IS PROHIBITED.

CUSTOMER SIGNATURE:

STATE:	RELEASED	2017-04-07
DRAWN:	RAF	2017-03-31
CHECKED:	DMF	2017-03-31
APPROVED:	TRB	2017-04-07
REPLACES:		

THIRD ANGLE PROJECTION

DATE:

GEOTEK
A Whole New World of Composites
1421 SECOND AVE NW
STEWARTVILLE, MN 55976
(800) 533-1680
www.geotekinc.com

DESCRIPTION:
TANGENT ASSEMBLY, SERIES 2500
168 in, CUSTOM SPECIFICATION

SIZE	DWG. NO.	BEAM COLOR:	REV:
B	**TB2500168O162**	GRAY	0.0

SCALE: 1:16 | WEIGHT: 63 LBS | SHEET 1 OF 1